MODEL SA9000/12000

SA9000 DC–3000lb/1362kg CAPACITY
SA9000 AC–2700lb/1226kg CAPACITY
SA12000 DC–4500lb/2043kg CAPACITY
SA12000 AC–4000lb/1816kg CAPACITY
StrongArm ELECTRIC WINCH

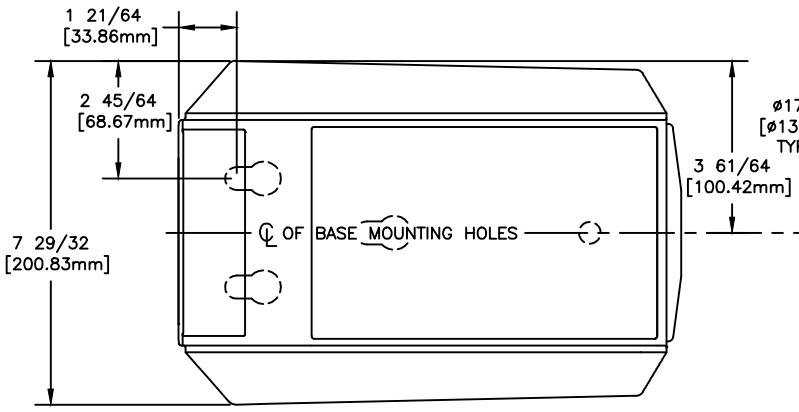

TOP VIEW

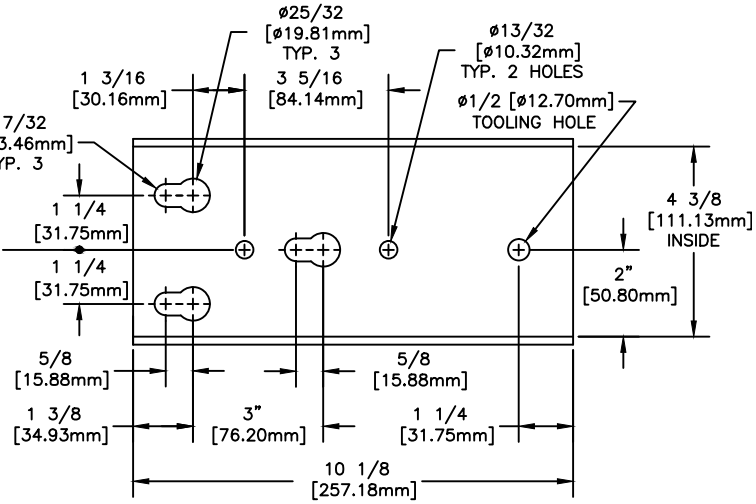

BASE HOLE PATTERN

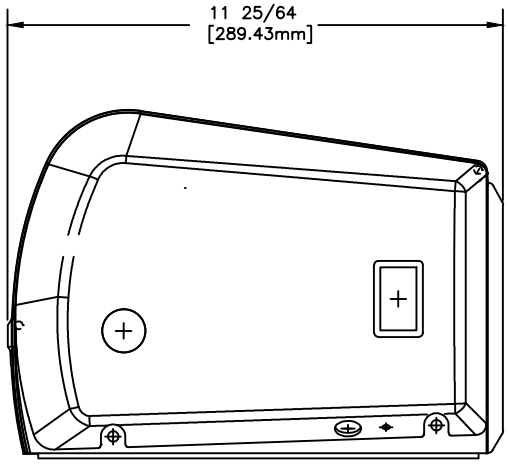

SIDE VIEW

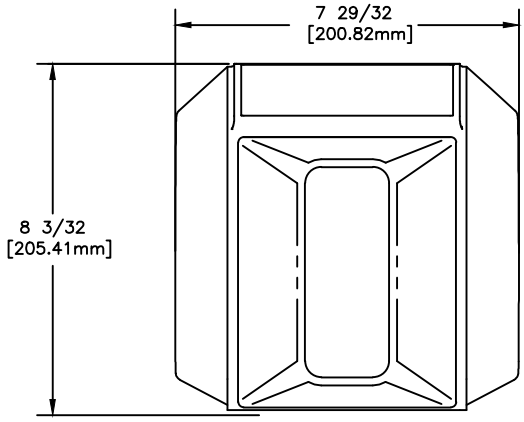

FRONT VIEW