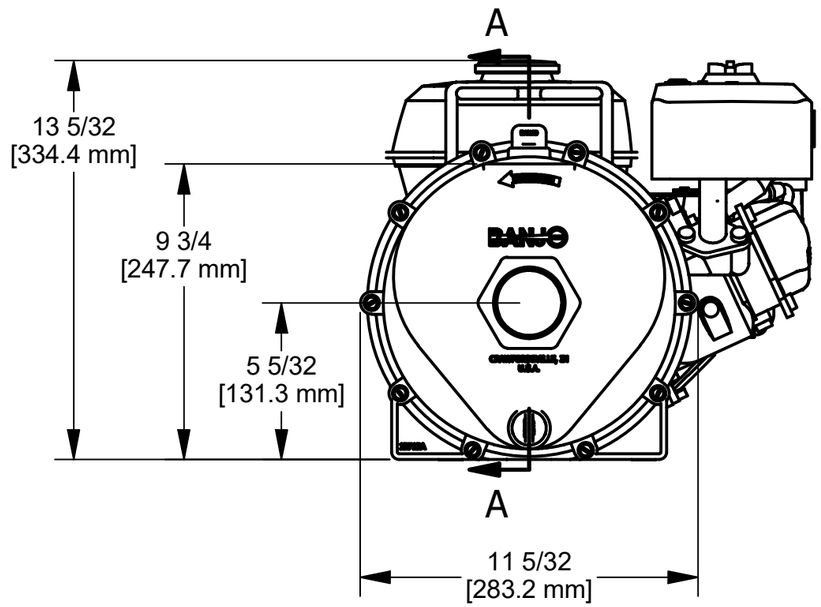

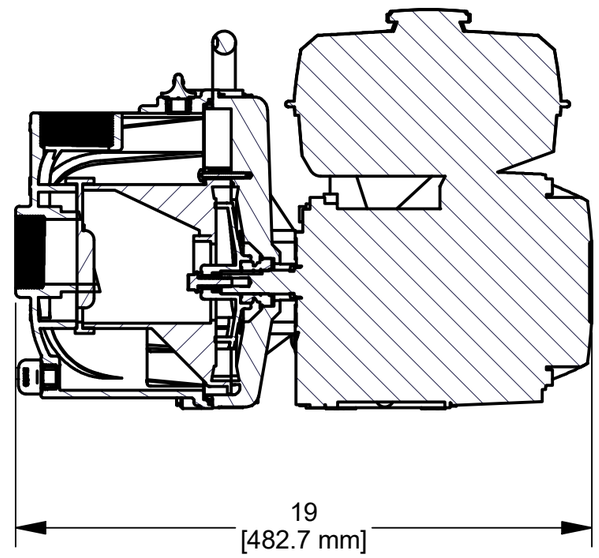

PARTS LIST			
ITEM	QTY	PART NUMBER	DESCRIPTION
1	1	12702A	2" POLY PUMP VOLUTE
2	1	12703A	POLY PUMP REAR BRACKET
3	1	12705	PUMP CHECKVALVE, EPDM
4	1	12712AP	2" POLY PUMP BODY
4-1	2	12777	1/2" DRAIN PLUG
4-2	2	UV15163	#114 O'RING, EPDM
4-3	1	X12712A	2" POLY PUMP BODY
5	4	12715A	5/16-24 X 1 3/4" HHCS WITH TORQ-PATCH
6	1	12716	PUMP SLINGER
7	4	12717	AS568A -011 O-RING, EPDM
8	1	12719A	AS568A -375 O-RING, EPDM, BLACK
9	10	12720	1/4-20 X 2 1/2" SL IND HWHS
10	2	12725	#6 X 1/2" PPH SMS
11	1	12733	MECHANICAL SEAL ASSY
12	1	12754	O'RING SEGMENT
13	1	12765A	5/16-24 X 1 1/8" HFS
14	1	12772	IMPELLER
15	1	12775A	7/16-14 HEX NUT
16	1	12900	#10 X 1 1/2" PPH SMS
17	4	12901	5/16" FLAT WASHER
18	1	12902A	3/16" SQ. X 5/8" KEY
19	1	12910	DECAL (N/S)
20	1	A204	AS568A -204 O-RING, EPDM, BLACK
21	1	E5H	5.5 HP HONDA GX160
22	10	V07018	1/4" LOCKWASHER
23	10	V07019	1/4-20 HEX NUT

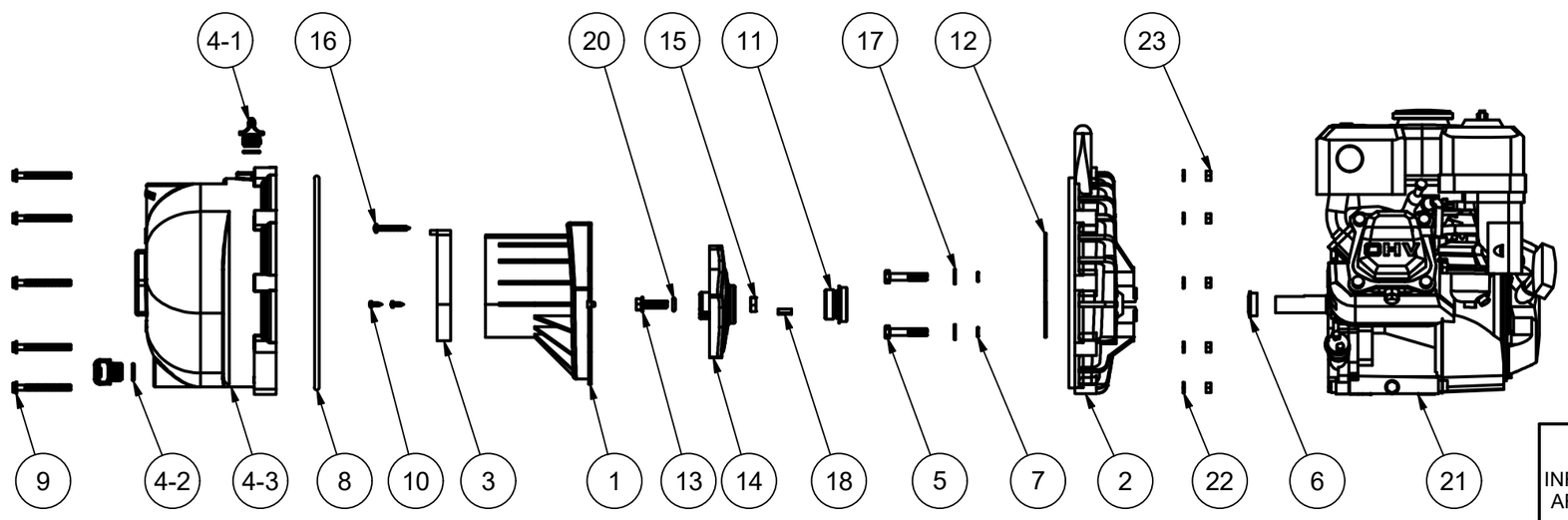

THIS DRAWING AND ALL INFORMATION CONTAINED THEREON ARE THE EXCLUSIVE PROPERTY OF BANJO CORPORATION.

UNLESS SPECIFICALLY NOTED, THIS DRAWING AND ITEMS SHOWN ON THIS DRAWING ARE SUBJECT TO CHANGE AT ANY TIME.

BANJO CORPORATION
150 BANJO DRIVE, CRAWFORDSVILLE, IN 47933
WEB SITE: WWW.BANJOCORP.COM
E-MAIL: BANJOSALES@IDEXCORP.COM

DESCRIPTION
2" POLY PUMP W/ 5HP HONDA ENG.

PART NUMBER
200PH-5