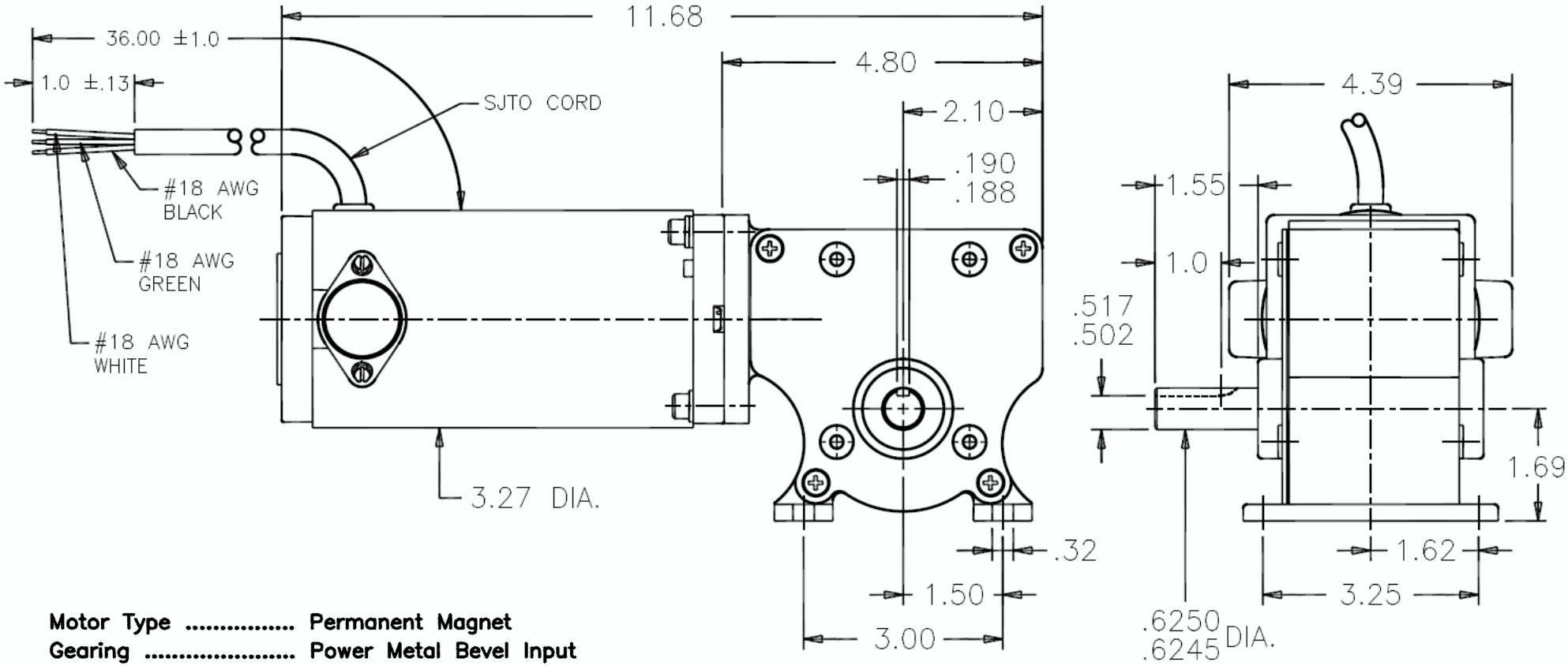

Motor Type ..... Permanent Magnet
Gearing ..... Power Metal Bevel Input
Hardened Steel Spur Others
Backdrive Capacity ... Yes

Ambient Rating ..... 40 Degrees C
Insulation Rating ..... Class F

Rotation ..... CW Facing Output Shaft
White Positive

Brushes ..... Replaceable
Bearings ..... Ball (Motor)
Needle (Gearbox)
Lubrication ..... Oil (4 oz by Weight)
Hodson 4111
Gulf Harmony 121
Weight ..... 15.5 Lbs

Volts (DC)	Output RPM	Full Load Torque In–Lb's	Current (Amps)	Input HP	Ratio To :1	Overhung Load (Lb's)
12	20	280	10.4	1/8	82	175

Dayton
Dayton Electric Mfg. Co.
5959 West Howard St.
Niles, IL 60714 USA

5LAF4