M-12920 | 1

CATALOG NUMBER	BODY COLOR	NPT HUB SIZE	CORD DIA. RANGE	Ø A (OVERALL)	(B) [4]	C	Ø D (THROAT DIA.)	*E ACROSS CORNERS	*E ACROSS FLATS
SHC1092	ALUMINUM	3"	2.44–2.63 [61.9–66.7]	4.75 [120.7]	2.70 [68.6]	1.30 [33.0]	3.04 [77.2]	4.86 [123.4]	4.50 [114.3]
SHC1093	ALUMINUM	3"	2.63–2.81 [66.7–71.4]	4.75 [120.7]	2.70 [68.6]	1.30 [33.0]	3.04 [77.2]	4.86 [123.4]	4.50 [114.3]
SHC1094	ALUMINUM	3"	2.81–3.00 [71.4–76.2]	4.75 [120.7]	2.70 [68.6]	1.30 [33.0]	3.04 [77.2]	4.86 [123.4]	4.50 [114.3]
SHC1095	ALUMINUM	3"	3.00–3.25 [76.2–82.5]	4.75 [120.7]	2.70 [68.6]	1.30 [33.0]	3.04 [77.2]	4.86 [123.4]	4.50 [114.3]

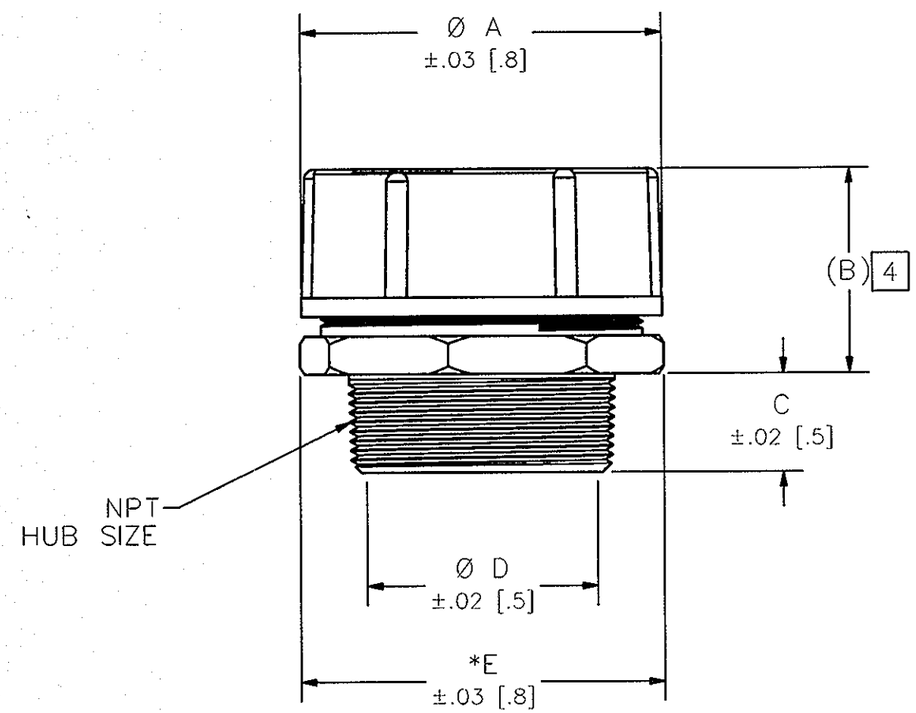

NOTES:

1. DIMENSIONS ARE IN INCHES [MM].
2. LOCKNUT PURCHASED SEPARATELY.
3. BUSHING COATED WITH AMBER PETROLEUM JELLY.

[4] REFERENCE ONLY, DIMENSION MAY VARY.

LIST OF PARTS

DESCRIPTION	MATERIAL	FINISH
CORD CONNECTOR BODY STR MALE	ALUMINUM	
BUSHING	BLACK NEOPRENE	SEE NOTE 3
WASHER	NYLON	
NUT	ALUMINUM	

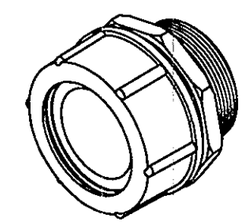

CATALOG NO. SHC1092
(NOT SHOWN TO SCALE)

REV	DESCRIPTION	APP	DATE
1	INITIAL RELEASE PER DCN 21189	DDL PJB	05/06/15

THE DESIGN AND DIMENSIONS OF THE PRODUCT SHOWN ON THIS DRAWING ARE SUBJECT TO CHANGE WITHOUT NOTICE

TITLE
STRAIGHT ALUMINUM CORD CONNECTOR FORM 8

TOLERANCES UNLESS OTHERWISE SPECIFIED
.XX = ± .01
.XXX = ± .005
ANGLES = ± 2°

WIRING DEVICE-KELLEMS
HUBBELL INCORPORATED
SHELTON, CT

DR. BY	SR	APP. BY	
TR. BY		SCALE	1/2
CHK. BY	DDL	DATE	05/06/15

DIMENSION SHEET FOR CAT. NO. SEE TABLE

REPAIRABLE ☐ NON-REPAIRABLE ☐

B

M-12920

1

CODE 74545