4PE27

3-1/2” Heavy Duty Chest Pull Handle, Zinc Plated Finish with Screws

Hardware Included:
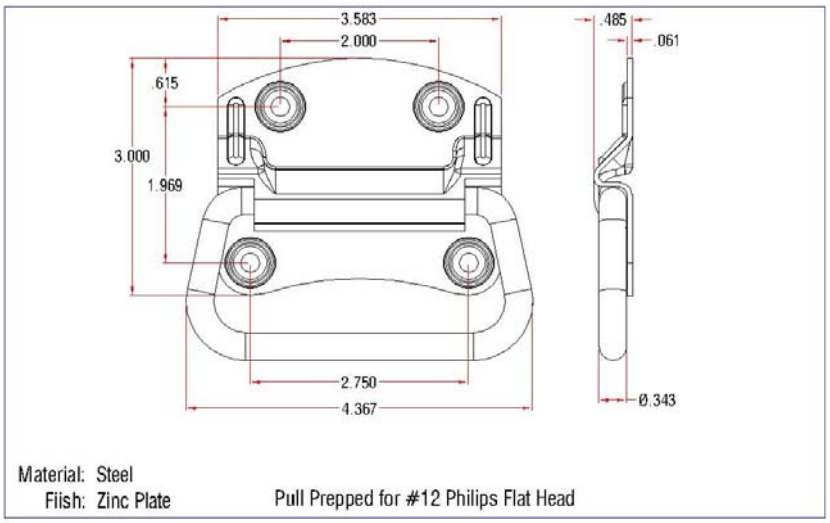
Sheet Metal Screws 4 – 12x1”