M-6718 | 1

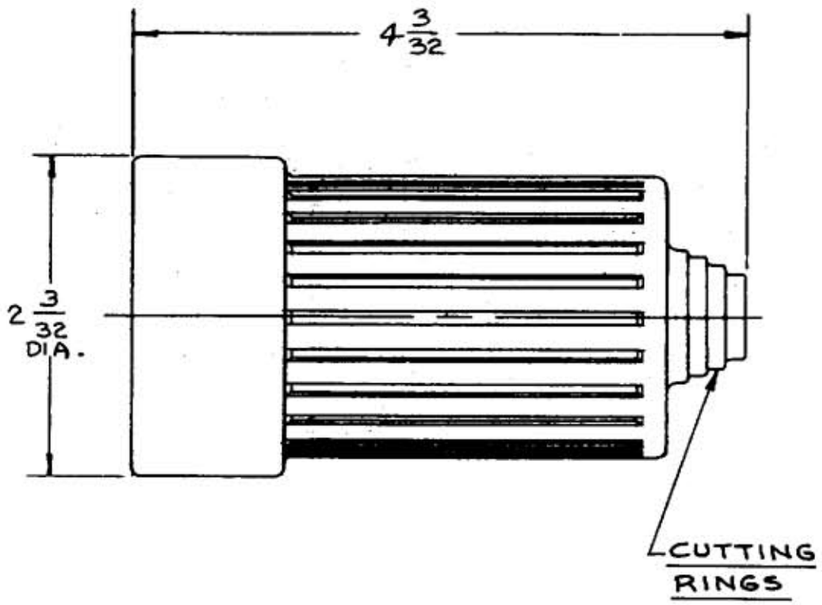

CAT. NO.	MATERIAL	COLOR
6018	EPDM	BLACK
60CM18	EPDM	YELLOW

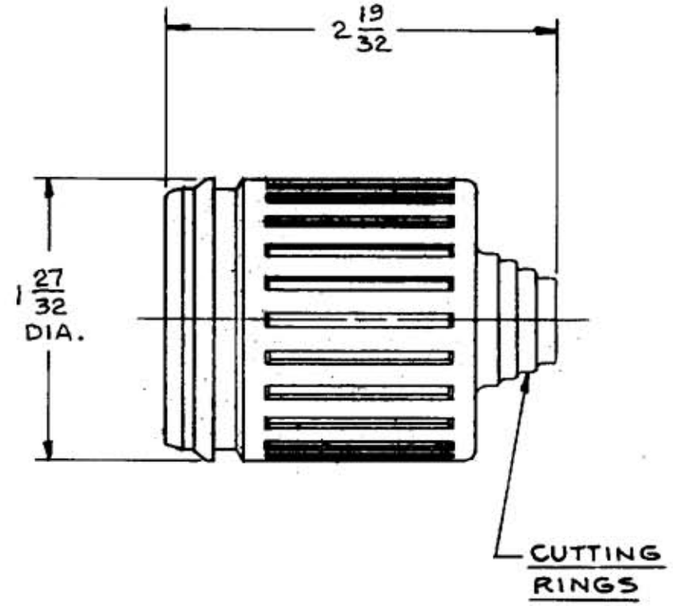

CAT. NO.	MATERIAL	COLOR
6017	EPDM	BLACK
60CM17	EPDM	YELLOW

LIST OF PARTS

DESCRIPTION	MATERIAL	FINISH

SYM	REVISIONS	APP	DATE
1	MATL. WAS INSULPRENE AJL	AJL	3-7-90

THE DESIGN AND DIMENSIONS OF THE PRODUCT SHOWN ON THIS DRAWING ARE SUBJECT TO CHANGE WITHOUT NOTICE.

TITLE
WEATHER PROOF COVER

TOLERANCES UNLESS OTHERWISE SPECIFIED
FRACTIONS ± 1/64
DECIMALS ± .005
ANGLES ± 2°

WIRING DEVICE DIVISION
HARVEY HUBBELL, INC.
BRIDGEPORT, CONN.

DR. BY AJL | APP. BY
TR. BY | SCALE 1:1
CHK'D. BY | DATE 7-7-88

DIMENSION SHEET FOR CAT. NO. SEE CHART

REPAIRABLE ☐ NON-REPAIRABLE ☒

B M-6718 1

CODE 74545