REVISIONS				
REV	DESCRIPTION	DATE	APPR'D	TRACK

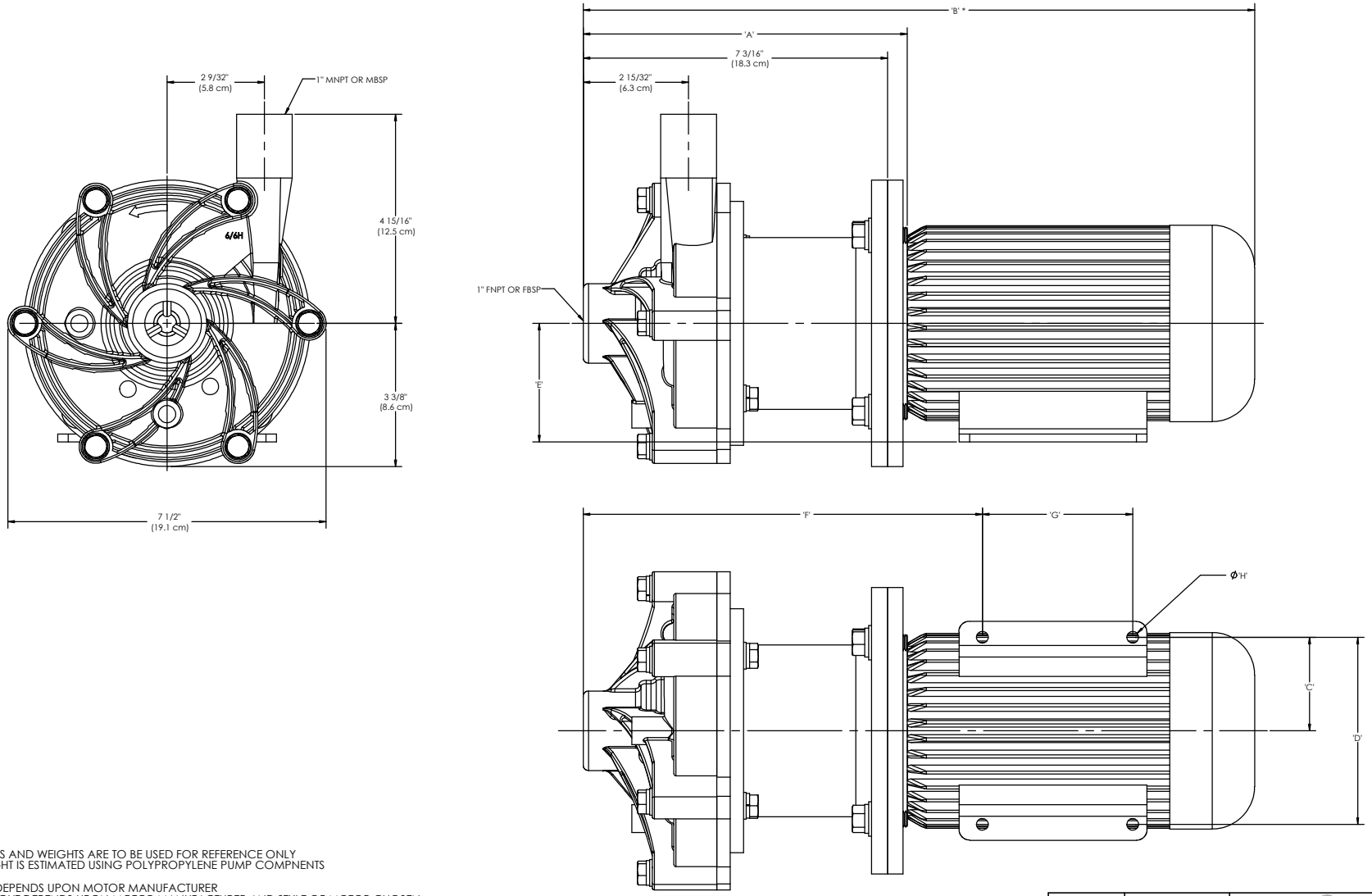

NOTES:
1. DIMENSIONS AND WEIGHTS ARE TO BE USED FOR REFERENCE ONLY
2. PUMP WEIGHT IS ESTIMATED USING POLYPROPYLENE PUMP COMPNENTS

*- DIMENSION DEPENDS UPON MOTOR MANUFACTURER
**- MOTOR WEIGHT DEPENDS UPON MOTOR MANUFACTURER AND STYLE OF MOTOR CHOSEN

PUMP MODEL	MOTOR FRAME	DIM 'A'	DIM 'B' *	DIM 'C'	DIM 'D'	DIM 'E'	DIM 'F'	DIM 'G'	DIM 'H'	PUMP WT **	MOTOR WT ***
DB6/6H/9	NEMA 56C	7-3/16" (18.3 CM)	17-7/16" (44.3 CM)	2-7/16" (6.2 CM)	4-7/8" (12.4 CM)	3-1/2" (8.9 CM)	9-15/16" (25.2 CM)	3" (7.6 CM)	11/32" (0.9 CM)	10.5 LBS (4.8 KG)	28 LBS (12.7 KG)
DB6/6H/9	NEMA 145TC	7-3/16" (18.3 CM)	17-15/16" (45.6 CM)	2-3/4" (7.0 CM)	5-1/2" (14.0 CM)	3-1/2" (8.9 CM)	9-13/16" (50.3 CM)	5" (12.7 CM)	11/32" (0.9 CM)	10.5 LBS (4.8 KG)	32 LBS (14.5 KG)
DB6/6H/9	IEC 63- B14 OR B5 FLANGE	7-5/8" (19.4 CM)	14-7/8" (37.8 CM)	1-31/32" (5.0 CM)	3-15/16" (10.0 CM)	2-15/32" (6.3 CM)	9-7/32" (23.4 CM)	3-5/32" (8.0 CM)	9/32" (0.7 CM)	14.0 LBS (6.4 KG)	17 LBS (7.7 KG)
DB6/6H/9	IEC 71- B14 OR B5 FLANGE	7-5/8" (19.4 CM)	15-13/16" (40.2 CM)	2-7/32" (5.6 CM)	4-13/32" (11.2 CM)	2-25/32" (7.1 CM)	9-13/32" (23.9 CM)	3-17/32" (9.0 CM)	9/32" (0.7 CM)	14.0 LBS (6.4 KG)	22 LBS (10.0 KG)

UNLESS OTHERWISE SPECIFIED
DIMENSIONS ARE IN INCHES
TOLERANCE ARE:
.XXX ± .005
.XX ± .010
FRAC. ± 1/32
DEGREES ± 1°
FINISH 125

SIGNATURES
DRAWN: C.M.B 2-28-07
ENGR:
DO NOT SCALE DRAWING

DISTRIBUTION BLOCK

DEPT	REC'D	DEPT	REC'D
PUMP ASSM		INJ MOLD	
STILL ASSM		PURCH	
WELD SHOP		SALES	X
MACH SHOP		ADV	

THIRD ANGLE PROJECTION
CAD GENERATED DRAWING, DO NOT MANUALLY UPDATE

901 GREENGARDEN ROAD
ERIE, PENNSYLVANIA 16501
FTI FLUID TECHNOLOGY, INC.
PHONE: (814) 455-4476
FAX: (814) 455-8018

PRODUCT: DB6/6H/9
TITLE: OUTLINE DIM- THREADED HSG
SIZE: D
PART NUMBER: R100503
REV: 0
SCALE: 1:1.2
SHEET: 1 OF 1
CHECKED