M-12395 | 2

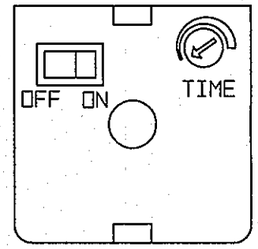


FIG. 1

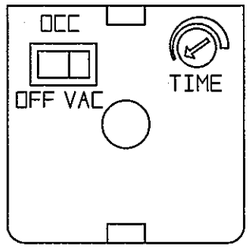


FIG. 2

VIEWS WITH COVER REMOVED

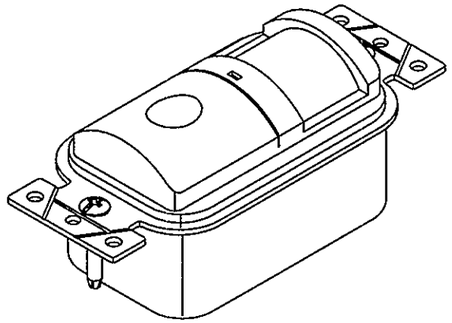

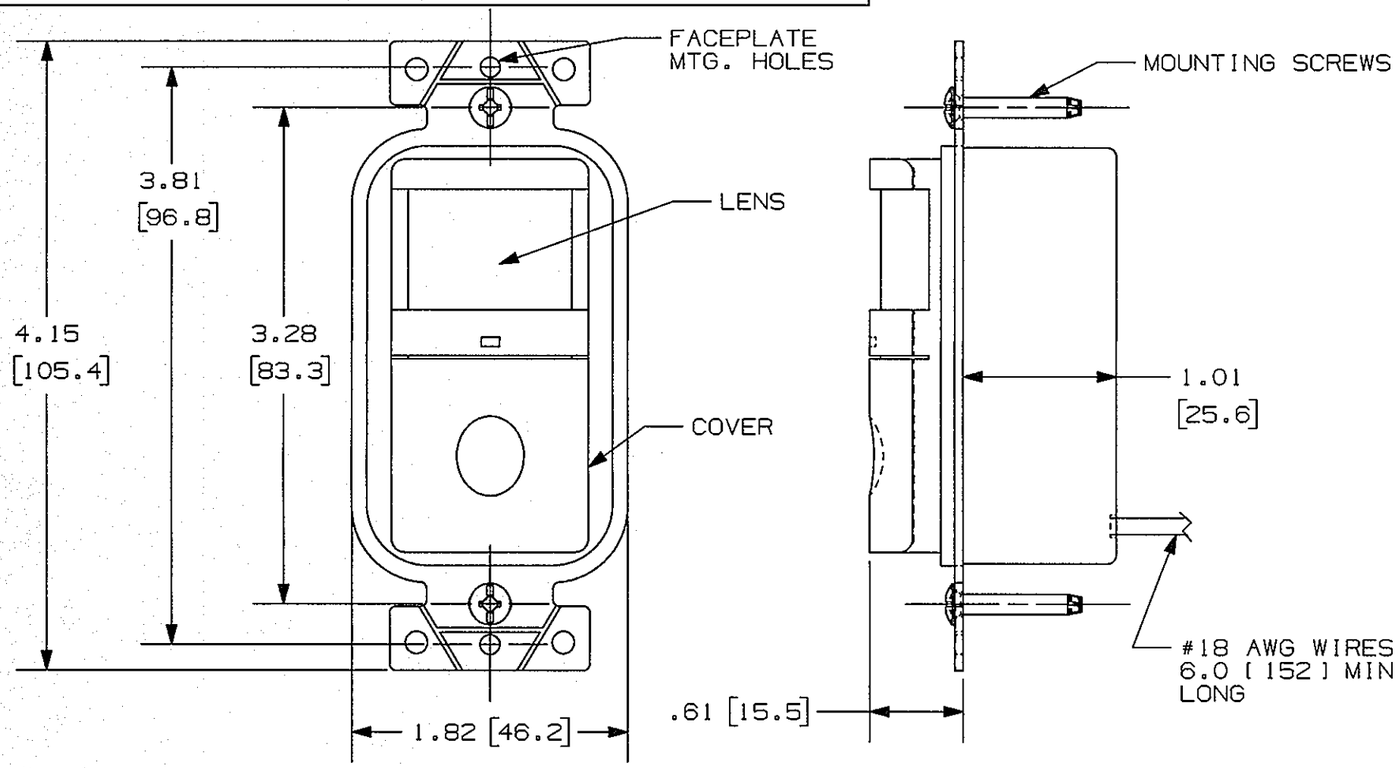


| CATALOG NO. | PHOTO-CELL | NIGHT LIGHT (LED) | 600W | 120-277VAC 1000/1800W | ZERO CROSS CIRCUITRY | GROUND WIRE POWER | NEUTRAL WIRE POWER | VACANCY MODE (MANUAL ON) | AUTO/MANUAL ON MODE, MULTI-WAY FUNCTION | FIGURE NUMBER |
|---|---|---|---|---|---|---|---|---|---|---|
| WS1000xx | | | V | | | V | | Auto ON | | 2 |
| WS1000Nxx | | V | V | | | V | | Auto ON | | 2 |
| WS2000xx | V | | | V | V | V | | | V | 2 |
| WS2000Nxx | V | V | | V | V | V | | | V | 2 |
| WS2004xx | V | | | V | V | | V | | V | 2 |
| WS2004Nxx | V | V | | V | V | | V | | V | 2 |
| WS1001xx | | | V | | | V | | Manual ON | | 1 |
| WS1001Nxx | | V | V | | | V | | Manual ON | | 1 |

ALL DIMENSIONS ARE IN INCHES AND [MILLIMETERS]

CODE 74545

LIST OF PARTS

| DESCRIPTION | MATERIAL | FINISH |
|---|---|---|
| HOUSING | THERMOPLASTIC | ---- |
| LENS | POLYETHYLENE | ---- |
| MOUNTING STRAP | STEEL | ZINC |
| MOUNTING SCREWS | STEEL | ZINC |

| SYM | REVISIONS | APP | DATE |
|---|---|---|---|
| 2 | REMOVED VIEW OF FIG. 3.<br>FIG. 1 REMOVED OCC.<br>FIG. 2 VAC WAS ON.<br>TABLE REMOVED<br>MANUAL TIMING,<br>AUTO TIMING,<br>ATP2000xxx, ATP2000Nxx,<br>ATP2004xx AND<br>ATP2004Nxx.<br>FIGURE NUMBER FOR<br>WS1000xx AND WS1000Nxx<br>2 WAS 1.<br>PER DCN 22847 SPN | SL | 2/8/17 |
| 1 | RELEASED PER DCN19178 SPN | SL | 1/17/13 |

THE DESIGN AND DIMENSIONS OF THE PRODUCT SHOWN ON THIS DRAWING ARE SUBJECT TO CHANGE WITHOUT NOTICE

TITLE

WS SERIES
WALL SWITCH PIR SENSOR

TOLERANCES UNLESS OTHERWISE SPECIFIED
.XX = ±.01
.XXX = ±.005
ANGLES = ±2°

WIRING DEVICE-KELLEMS
HUBBELL INCORPORATED
SHELTON, CT

| | |
|---|---|
| DR. BY SRE | APP. BY SL |
| TR. BY | SCALE 1:1 |
| CHK. BY SL | DATE 1/17/13 |

DIMENSION SHEET FOR CAT. NO. SEE CHART

REPAIRABLE ☐
NON-REPAIRABLE ☒

B

M-12395

N